WH-76 Mayapuri Industrial Area Phase-I New Delhi – 110 064 India
Phone: +91-11-2513 3021, 2514 3474 Fax: +91-11-2540 5799, 2514 6900 Email: contact@acmealloys.com Website: http://www.acmealloys.com

Threaded Pipe Fittings in Heat & Corrosion Resistant Stainless Steels

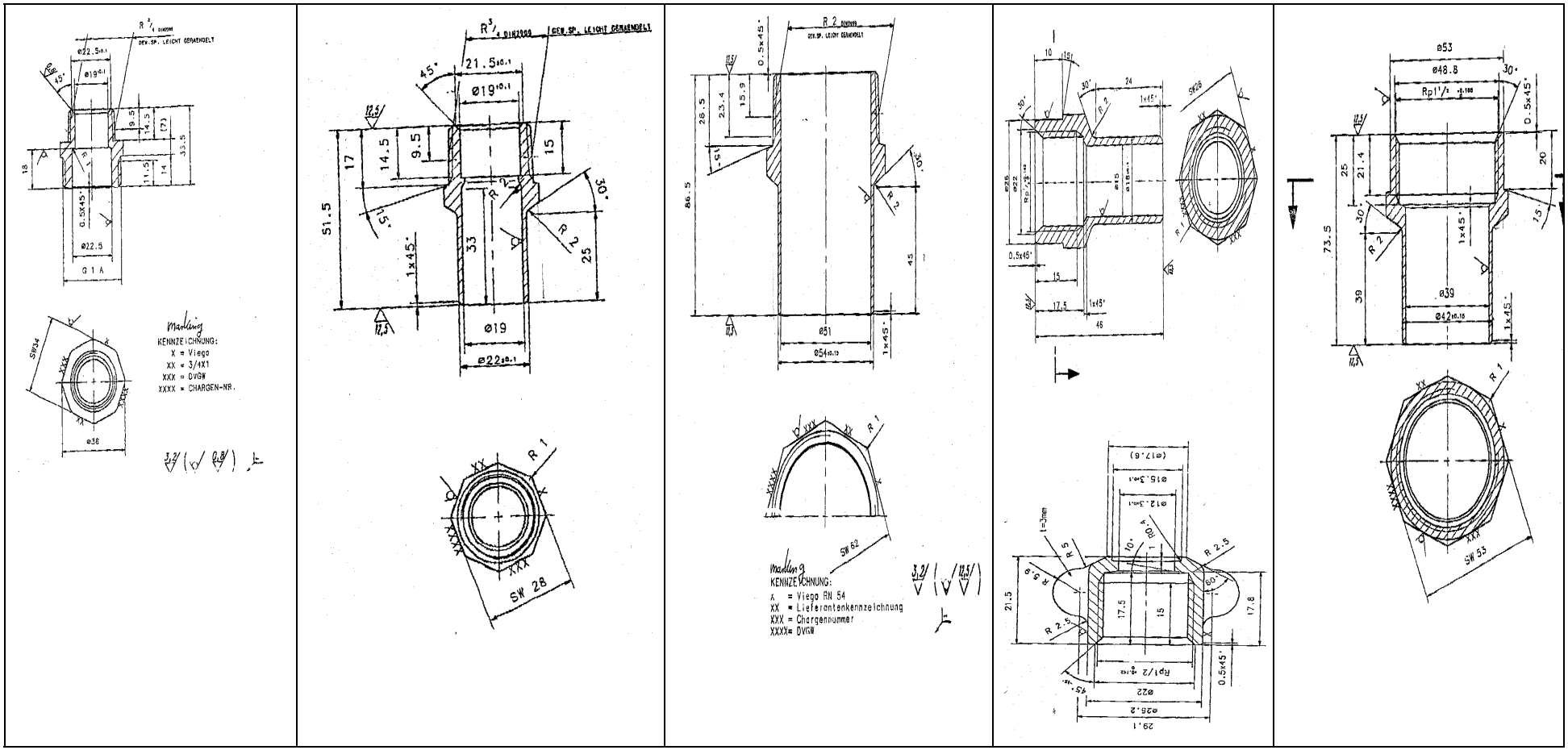

Alloys commonly used for Threaded Pipe Fittings include equivalents of wrought alloy type AISI – 302, 303Se, 304, 310, 316, 317, 340, 347, 410, 420, 422, 442, 446
Proprietary Alloys that are trademark of the respective companies include Hastelloy-B, C, D; Nitronic - 50, Nitronic - 60, Alloy-20, Y-17, R-55, Monel - 400, Monel - 600

Acme Alloys ™ Private Limited is a 100% export business division of parent company, AcmeCast ™ which is providing engineered casting solutions since 1980.

www.acmealloys.com

WH-76 Mayapuri Industrial Area Phase-I New Delhi – 110 064 India
Phone: +91-11-2513 3021, 2514 3474 Fax: +91-11-2540 5799, 2514 6900 Email: contact@acmealloys.com Website: http://www.acmealloys.com

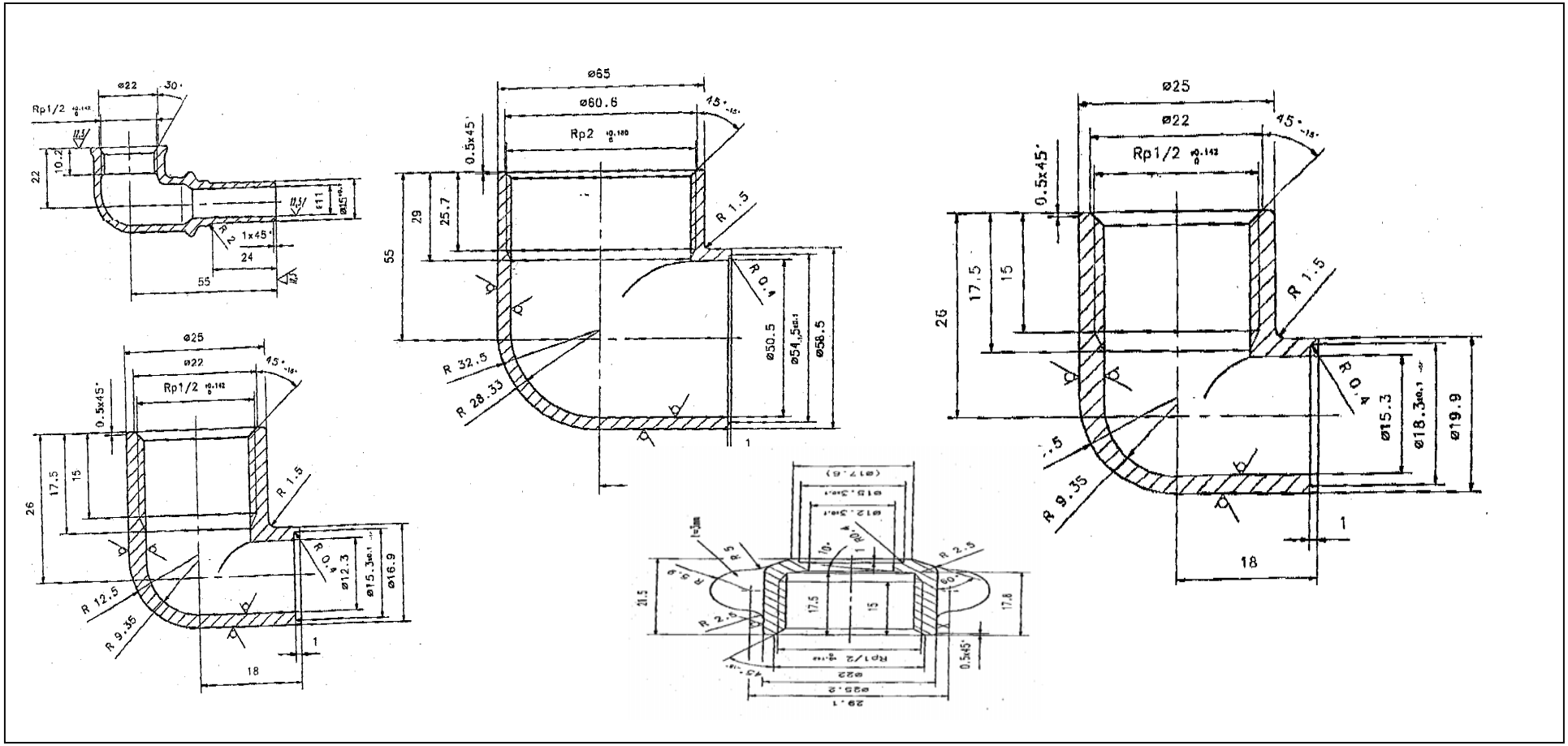

Alloys: Standard and Non-Standard Corrosion & Heat Resistant Alloys; For example, ASTM/ACI- 743, 744, 351/DIN/BIS cast equivalents of

- Standard Wrought Martensitic Stainless Steel Alloy Type AISI- 403, 410, 414, 416, 416Se, 420, 420F, 422, 431, 440A, 440B, 440C
- Standard Wrought Austenitic Stainless Steel Alloy Type AISI- 201, 202, 205, 301, 302, 302B, 303, 303Se, 304, 305, 308, 309, 310, 314, 316, 317, 321, 330, 347, 348, 384
- Heat Resistant Alloys Type ACI - HA, HC, HD, HE, HF, HH, HI, HK, HL, HN, HP, HT, HU, HW, HX

USA
Acme Alloys | 1800 Golden Oak Street | Thousand Oaks | California 91320
Phone 949-439-0839 Fax 949-203-2179 Email amit@acmealloys.com

Acme Alloys ™ Private Limited is a 100% export business division of parent company, AcmeCast ™ which is providing engineered casting solutions since 1980.

www.acmealloys.com